THIS COPY IS PROVIDED ON A RESTRICTED BASIS AND IS NOT TO BE USED IN ANY WAY DETRIMENTAL TO THE INTERESTS OF PANDUIT CORP.

PANDUIT P/N	WEIGHT
NFCDRK	0.10 LBS/EACH 45.36 g/EACH

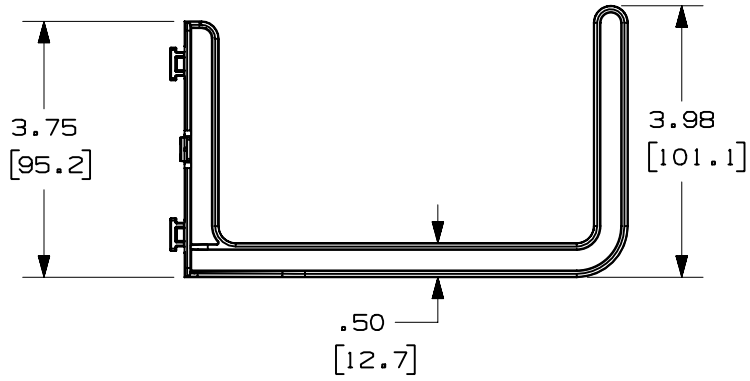

NOTES:
1. VISIT OUR ON-LINE CATALOG AT WWW.PANDUIT.COM FOR A CURRENT LIST OF PRODUCTS APPLICABLE FOR USE WITH THIS PART.
2. DIMENSIONS IN PARENTHESIS ARE METRIC.
3. MATERIAL: PC
4. PACKAGED - 16 PER KIT

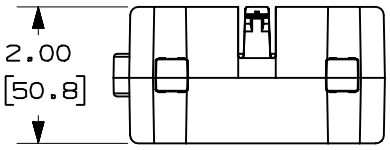

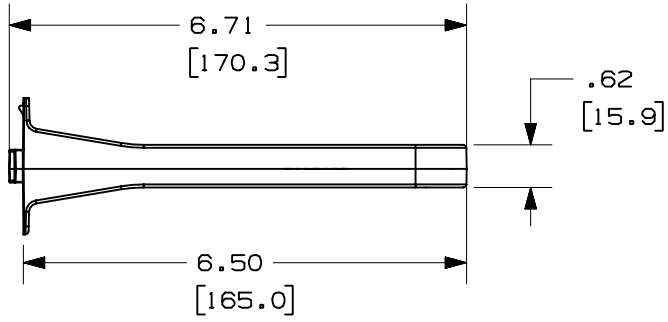

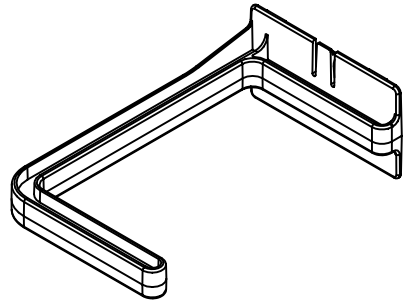

REV	DATE	BY	CHK	DESCRIPTION	ECN - R	CUST	SUP	OTH
R	7-07-03	RVLE		RELEASED TO PRODUCTION	10169-02			

MODEL FILENAME: V10169BA_L-RING_00.PRT

CAD FILENAME/LAYERS: V10169BA_DC_00A.PRT

PANDUIT CORP. TINLEY PARK, ILLINOIS

NETFRAME CENTER D-RING KIT
CUSTOMER DRAWING

UNLESS OTHERWISE SPECIFIED, DIMENSIONAL TOLERANCES ARE:
(.X) ± (.XXX) ±
(.XX) ± ANGLES ±

UNLESS OTHERWISE SPECIFIED, ALL DIMENSIONS ARE GIVEN IN INCHES, THIRD ANGLE PROJECTION.

DRAWN BY: RVLE

DATE: 7-07-03

CHK'D:

MAT'L: SEE NOTES

SCALE: NONE

DRAWING NO.: 10169-02

DWG SIZE: A

Mouser Electronics

Authorized Distributor

Click to View Pricing, Inventory, Delivery & Lifecycle Information:

Panduit:
NFCDRK