THIS DRAWING IS UNPUBLISHED. RELEASED FOR PUBLICATION – ,– .
© COPYRIGHT – By – ALL RIGHTS RESERVED.

LOC	DIST
G	14

REVISIONS

P	LTR	DESCRIPTION	DATE	DWN	APVD
	P1	REVISED PER ECO–19–007720	21MAY2020	KR	DR

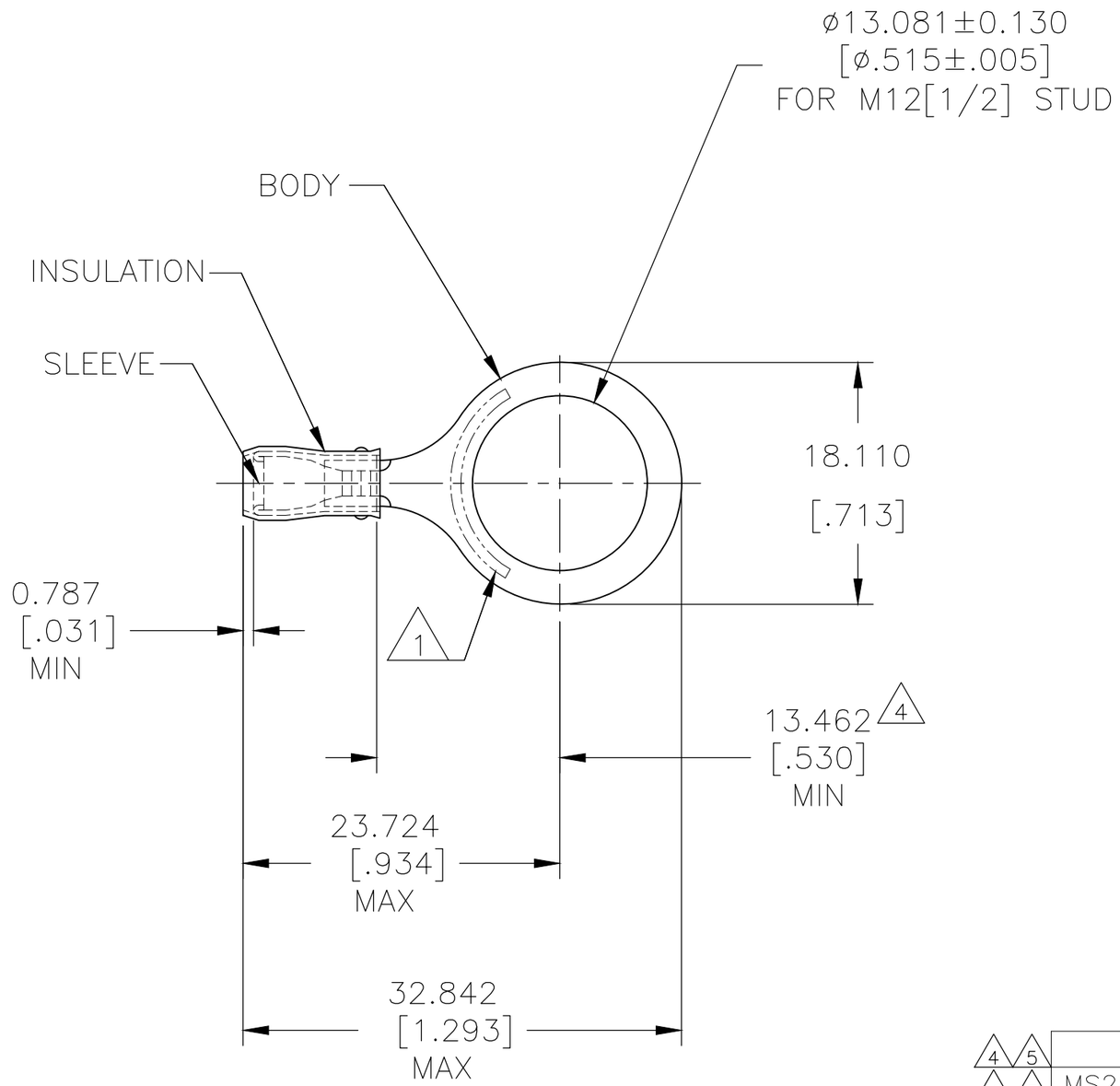

AMP WIRE RANGE	5 UL E13288 Listed	6 CSA LR7189 Certified
22–16 AWG SOLID OR STRANDED	22–16 AWG STRANDED	22–16 AWG SOLID OR STRANDED

1. STAMP AMP 22–18* APPROX AS SHOWN 22–16 TERMINALS ARE STAMPED 22–18 IN ACCORDANCE WITH MILITARY SPEC SAE AS7928 COMMERCIAL WIRE RANGE IS 22–16.
2. WIRE INSULATION DIA: 2.032–3.175[.080–.125].
3. BODY MATERIAL THK: 0.787±0.051[.031±.002].
4. APPLIES FROM EDGE OF METAL WIRE BARREL TO CENTER OF STUD HOLE.
5. UL LISTED
6. CSA CERTIFIED

MILITARY P/N AND CLASS	QUANTITY	PACKAGE TYPE	PART NO
4 5 –	100	LOOSE PIECE, BOX	8–328975–1
4 5 MS25036–151 CLASS 1 & 2	1000	LOOSE PIECE	328975

AMP INCORPORATED
CUSTOMER SERVICE SYSTEMS

FOR ADDITIONAL PRODUCT INFORMATION OR COPIES OF DRAWINGS AND TECHNICAL DOCUMENTS	PRODUCT INFORMATION CENTER 1–800–522–6752
FOR APPLICATION TOOLING INFORMATION	TOOLING ASSISTANCE CENTER 1–800–722–1111
FOR ORDER ENTRY	1–800–526–5142

MAX RECOMMENDED OPERATING TEMPERATURE: 105°C[221°F] MAX

VOLTAGE RATING: 300 V MAX

CIRCULAR MIL AREA: 0.26–1.65mm² [509–3,260] CIR MILS SOLID OR STRANDED

THIS DRAWING IS A CONTROLLED DOCUMENT.

DIMENSIONS: mm [INCHES]

TOLERANCES UNLESS OTHERWISE SPECIFIED:

0 PLC	± –
1 PLC	± –
2 PLC	± –
3 PLC	± 0.127[.005]
4 PLC	± –
ANGLES	± –

MATERIAL: BODY & SLEEVE COPPER PER ASTM B–152 INSULATION: NYLON

FINISH: BODY & SLEEVE TIN PLATE PER ASTM B545 INSULATION: COLOR–RED

DWN	DK SCHRUM	9/8/93
CHK	RE HERSEY	9/8/93
APVD	ML ELLIS	9/8/93
PRODUCT SPEC	UL 486A–B 5	
APPLICATION SPEC	114–2157	
WEIGHT	–	

TE Connectivity

NAME: TERMINAL, RING TONGUE, PIDG™, WIRE SIZE, 22–16 AWG

SIZE	CAGE CODE	DRAWING NO	RESTRICTED TO
A3	00779	C–328975	–

CUSTOMER DRAWING | SCALE NTS | SHEET 1 OF 2 | REV P1

1470–19 (3/11)

THIS DRAWING IS UNPUBLISHED. RELEASED FOR PUBLICATION –,– .
© COPYRIGHT – By – ALL RIGHTS RESERVED.

LOC	DIST
G	14

REVISIONS

P	LTR	DESCRIPTION	DATE	DWN	APVD
	–	SEE SHEET 1	–	–	–

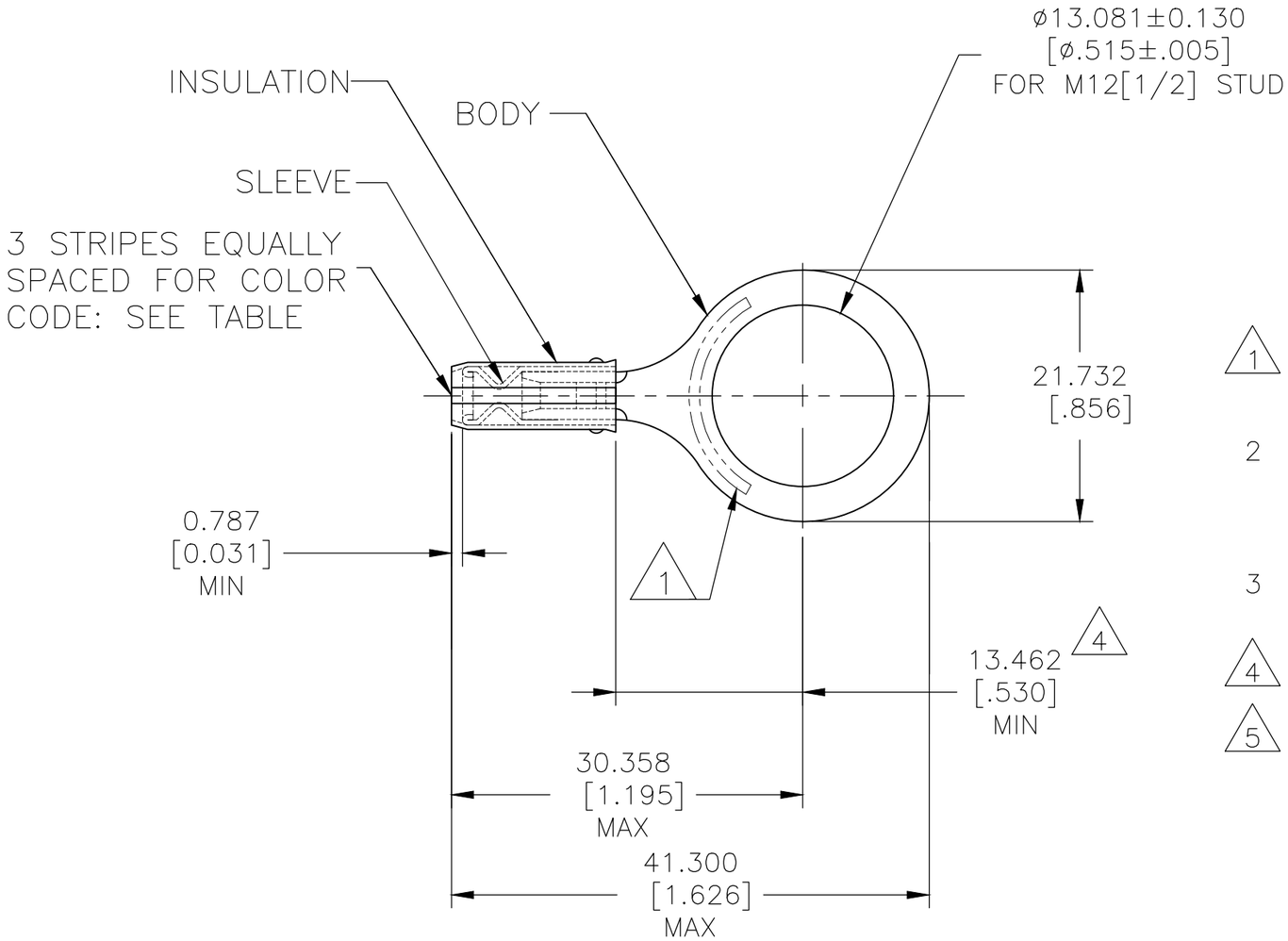

AMP WIRE RANGE	5 LR7189 Certified
SEE TABLE STRANDED	WIRE SIZE PER TABLE STRANDED

1 STAMP AMP APPROX AS SHOWN SEE TABLE BELOW.

2 WIRE INSULATION DIA: 0.965–2.794[.038–.110] FOR 22 AWG
1.168–2.794[.046–.110] FOR 20 AWG
1.422–2.794[.056–.110] FOR 18 AWG

3 BODY MATERIAL THK: 0.787±0.051[.031±.002].

4 APPLIES FROM EDGE OF METAL WIRE BARREL TO CENTER OF STUD HOLE.

5 CSA CERTIFIED

MILITARY P/N AND CLASS	STRIPE COLOR	1 STAMPING	WIRE SIZE	QUANTITY	PACKAGE TYPE	PART NO
5 M7928/1–37 CLASS 1 & 2	WHITE	18*	18	1000	LOOSE PIECE	2–328975–3
5 M7928/1–28 CLASS 1 & 2	RED	20*	20	1000	LOOSE PIECE	2–328975–2
5 M7928/1–19 CLASS 1 & 2	GREEN	22*	22	1000	LOOSE PIECE	2–328975–1

AMP INCORPORATED
CUSTOMER SERVICE SYSTEMS

FOR ADDITIONAL PRODUCT INFORMATION OR COPIES OF DRAWINGS AND TECHNICAL DOCUMENTS	PRODUCT INFORMATION CENTER 1–800–522–6752
FOR APPLICATION TOOLING INFORMATION	TOOLING ASSISTANCE CENTER 1–800–722–1111
FOR ORDER ENTRY	1–800–526–5142

MAX RECOMMENDED OPERATING TEMPERATURE: 105°C[221°F] MAX

VOLTAGE RATING: 300 V MAX

WIRE RANGE:	CIRC MIL AREA
22	0.38mm² [754]
20	0.60mm² [1,186]
18	0.96mm² [1,900]

STRANDED

THIS DRAWING IS A CONTROLLED DOCUMENT.

DIMENSIONS: mm [INCHES]

TOLERANCES UNLESS OTHERWISE SPECIFIED:
0 PLC ± –
1 PLC ± –
2 PLC ± –
3 PLC ± 0.127[0.005]
4 PLC ± –
ANGLES ± –

MATERIAL: BODY & SLEEVE COPPER PER ASTM B–152 INSULATION: NYLON

FINISH: BODY & SLEEVE TIN PLATE PER ASTM B545 INSULATION: COLOR–RED

DWN DK SCHRUM 9/8/93
CHK RE HERSEY 9/8/93
APVD ML ELLIS 9/8/93
PRODUCT SPEC –
APPLICATION SPEC 114–2157
WEIGHT –

TE Connectivity

NAME: TERMINAL, RING TONGUE, PIDG™, WIRE SIZE, 22, 20 & 18 AWG

SIZE	CAGE CODE	DRAWING NO	RESTRICTED TO
A3	00779	C–328975	–

CUSTOMER DRAWING | SCALE NTS | SHEET 2 OF 2 | REV P1

1470–19 (3/11)